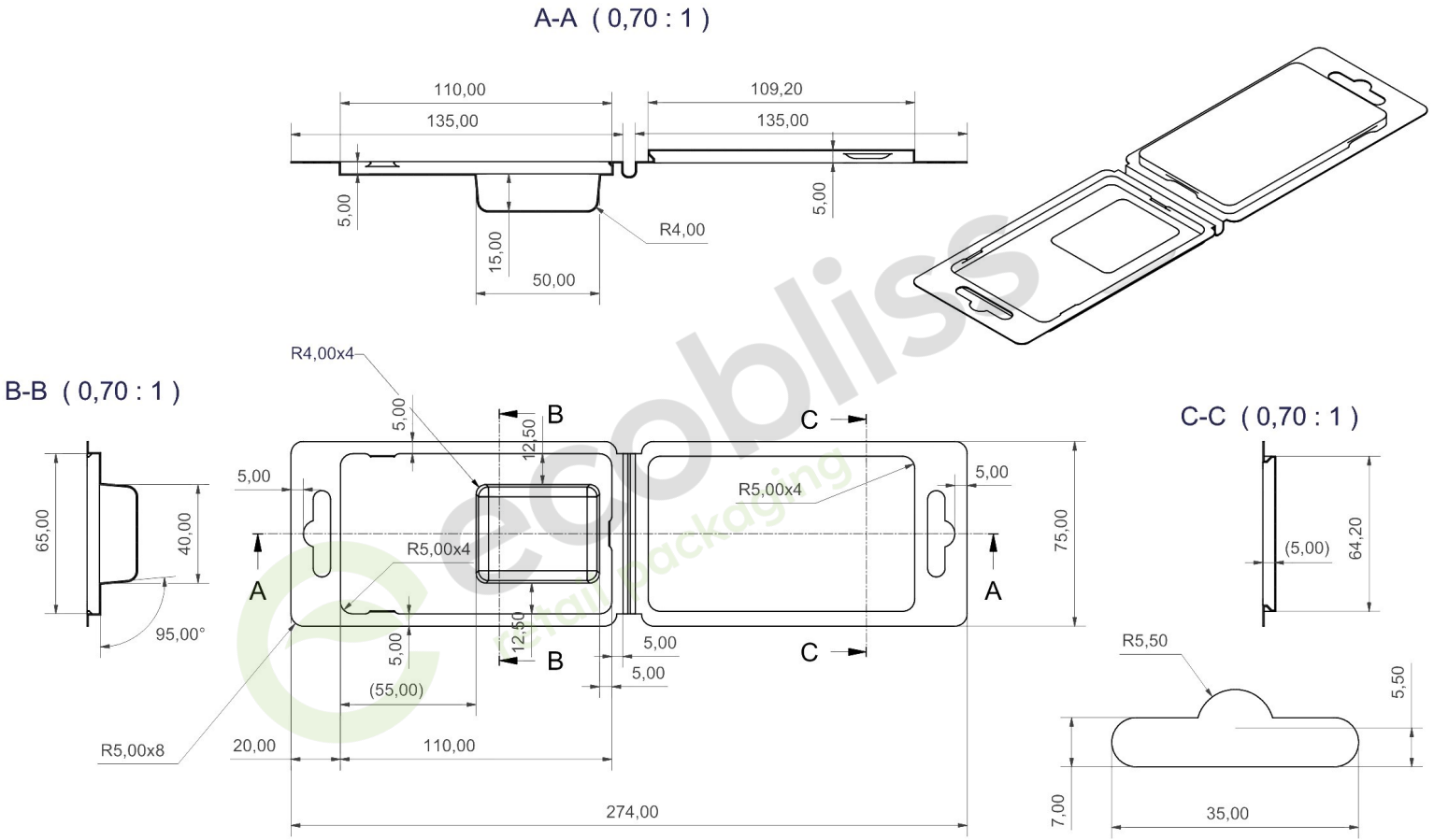

ecobliss retail packaging	Product Code	
	CS075135/40-50-15	
Material	**Tolerance**	**Release Date**
PET GAG 0,30mm	±0,5mm	01-05-2025