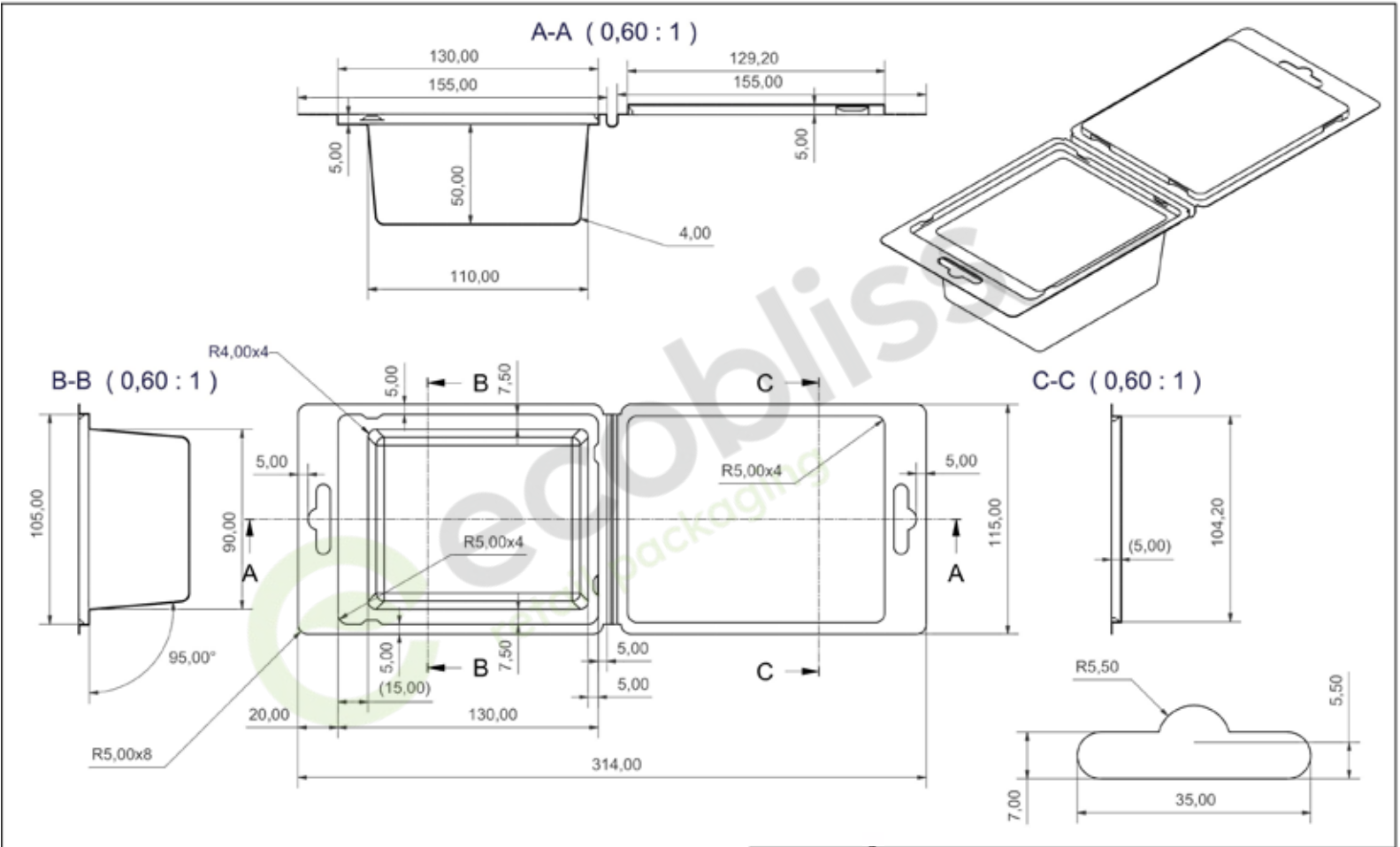

ecobliss retail packaging	Product Code	CS115155/90-110-50
Material	Tolerance	Release Date
PET GAG 0,50 mm	±0,5mm	01-05-2025