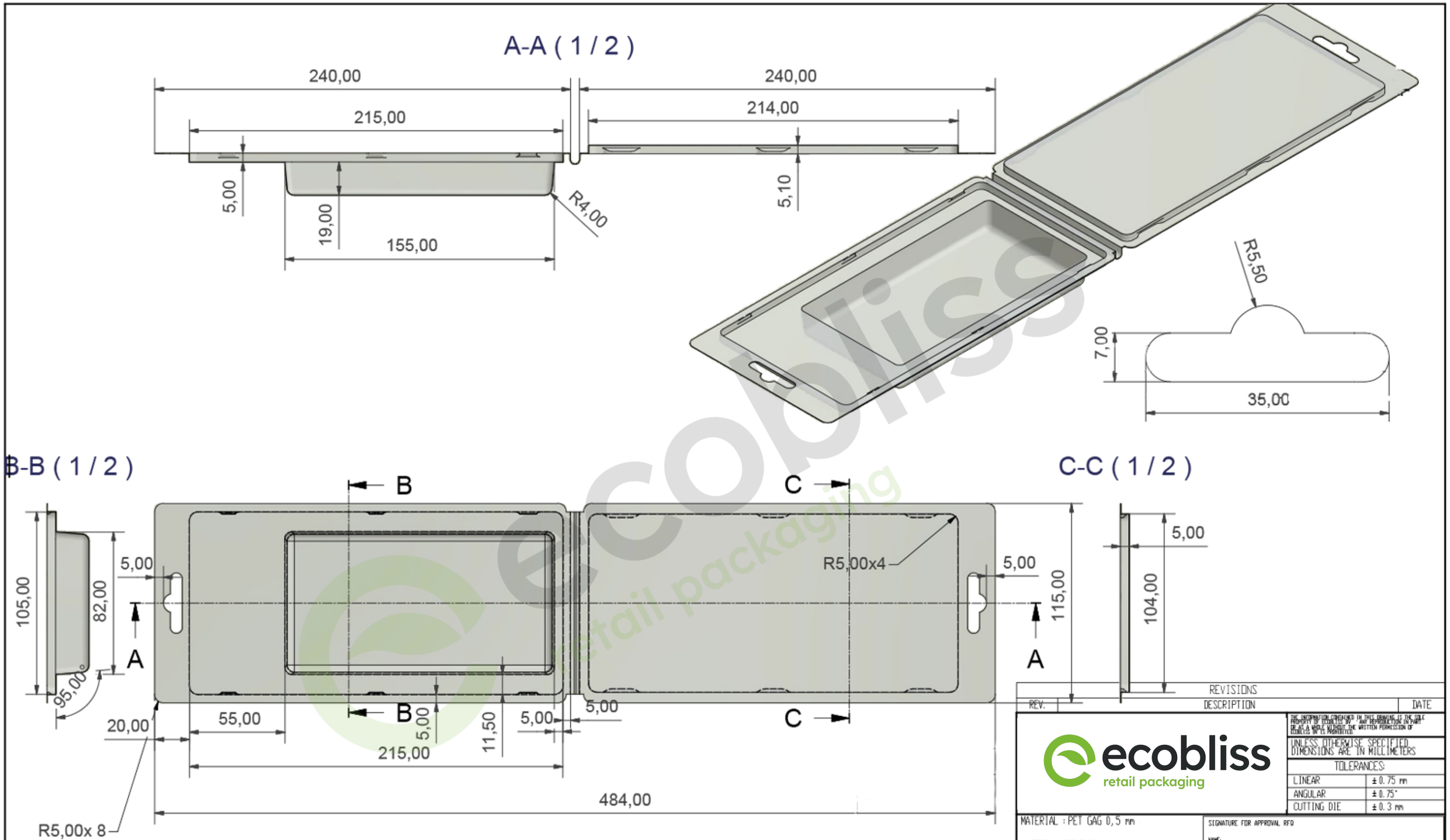

REVISIONS

REV.	DESCRIPTION	DATE

ecobliss
retail packaging

THE INFORMATION CONTAINED IN THIS DRAWING IS THE SOLE PROPERTY OF ECOBLISS SP. ANY REPRODUCTION IN PART OR AS A WHOLE WITHOUT THE WRITTEN PERMISSION OF ECOBLISS SP IS PROHIBITED.

UNLESS OTHERWISE SPECIFIED DIMENSIONS ARE IN MILLIMETERS

TOLERANCES:	
LINEAR	± 0.75 mm
ANGULAR	± 0.75°
CUTTING DIE	± 0.3 mm

MATERIAL : PET GAG 0,5 mm

MATERIAL COLOUR : clear

PART TYPE :

PART STATUS :

SIGNATURE FOR APPROVAL RFQ

NAME:

DATE:

SIGNATURE FOR APPROVAL PROTOTYPING

NAME:

DATE:

REMARKS :

DO NOT SCALE DRAWING

ORIGIN DATE : 13.04.2018

PROJECT NAME: CS115240 82 155 19

CUSTOMER:

DRAWING NUMBER:

SCALE 1:1 | DRAWN BY: | SHEET 1 OF 1 | A3